RevNo	Revision note	Date	Signature	Checked

ITEM	STOCK CODE	QTY	DESCRIPTION
1	(#2146)	1	BE-870FM MONITOR KIT
2	(#0804)	1	BE-L105 5M CAMERA CABLE
3	(#1623A)	1	BE-800C CAMERA
4	(#2052A)	1	BE-300C CAMERA KIT
5	(#0801)	1	BE-L120 20M CAMERA CABLE

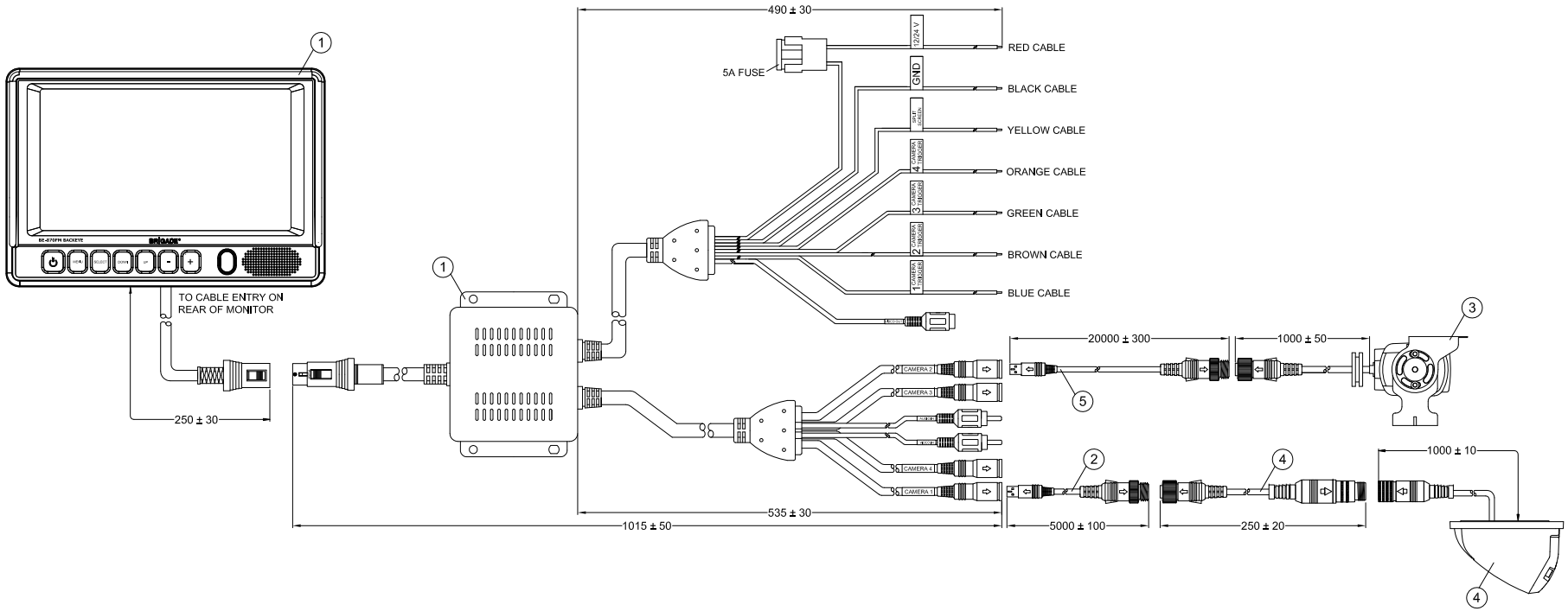

NOTES:
DIMENSIONS IN MM.
REFER TO COMPONENT DRAWINGS FOR COMPONENT DETAIL.
REFER TO COMPONENT PRODUCT SPEC FOR PRODUCT SPECIFICATIONS.

PROPRIETARY NOTICE
THIS DESIGN AND TECHNICAL INFORMATION APPEARING ON THIS DRAWING IS THE PROPERTY OF BRIGADE ELECTRONICS PLC, AND IS DISCLOSED IN CONFIDENCE. IT IS NOT TO BE COPIED, REPRODUCED, REVEALED TO OR APPROPIATE BY OTHERS, EITHER IN WHOLE OR IN PART WITHOUT THE EXPRESS WRITTEN CONSENT OF BRIGADE ELECTRONICS PLC.

Itemref	Quantity	Title/Name, designation, material, dimension etc		Article No./Reference	
Designed by M.BUTLER	Checked by D.KERAI	Approved by - date S.MATTHEWS	Filename	Date 02/11/2009	Scale N/A
BRIGADE ELECTRONICS		BE-870F-402 (#2549)			
		BE-000938-00-09		Edition A	Sheet 1/1